TYPE	SIZE	UNIT STYLE
SX	3A	PO

DIMENSIONS 104-143

Section	104
Effective	October 2006
Replaces	NEW
Page 1/3	

www.blackmer.com

RIGHT HAND ROTATION. FOR LEFT HAND ROTATION SHAFT PROJECTION IS OPPOSITE THAT SHOWN.

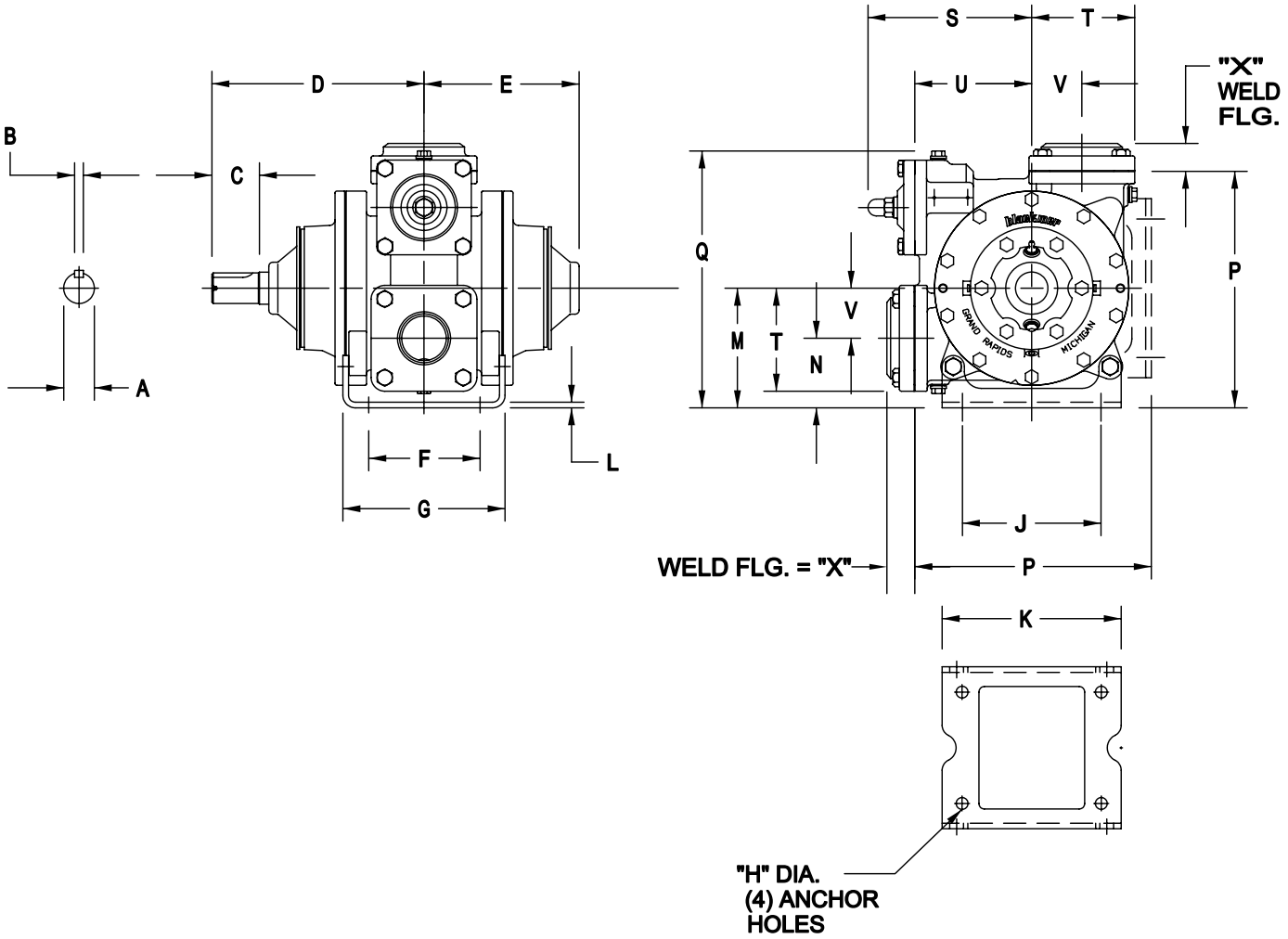

MOTOR FRAME SIZE			UNITS	DIMENSIONS									
				A	B	C	D	E	F	G	H	J	K
			IN	1.375	.393	2.14	9.53	7.00	5.00	7.28	Ø.53	6.25	8.04
			MM	35	10	54,4	241,9	177,8	127	184,9	13,5	158,8	204,2
				L	M	N	P	Q	R	S	T	U	V
			IN	.25	5.38	3.12	10.62	11.56	—	8.00	4.63	5.25	2.25
			MM	6,4	136,7	79,3	269,7	293,7	—	203,2	117,6	133,4	57,2
				W	X	Y	Z	AA	BB	CC	DD	EE	FF
			IN	—	1.25	1.25	.313	—	—	—	—	—	—
			MM	—	31,8	31,8	7,9	—	—	—	—	—	—
				WEIGHT									
			LBS	132									
			KG	60									

Blackmer Part of Pump Solutions Group A DOVER COMPANY www.blackmer.com	TYPE	SIZE	UNIT STYLE	DIMENSIONS 104-143	
	SX	3A	HRA	Section Effective Replaces Page 2/3	104 October 2006 NEW

RIGHT HAND ROTATION.

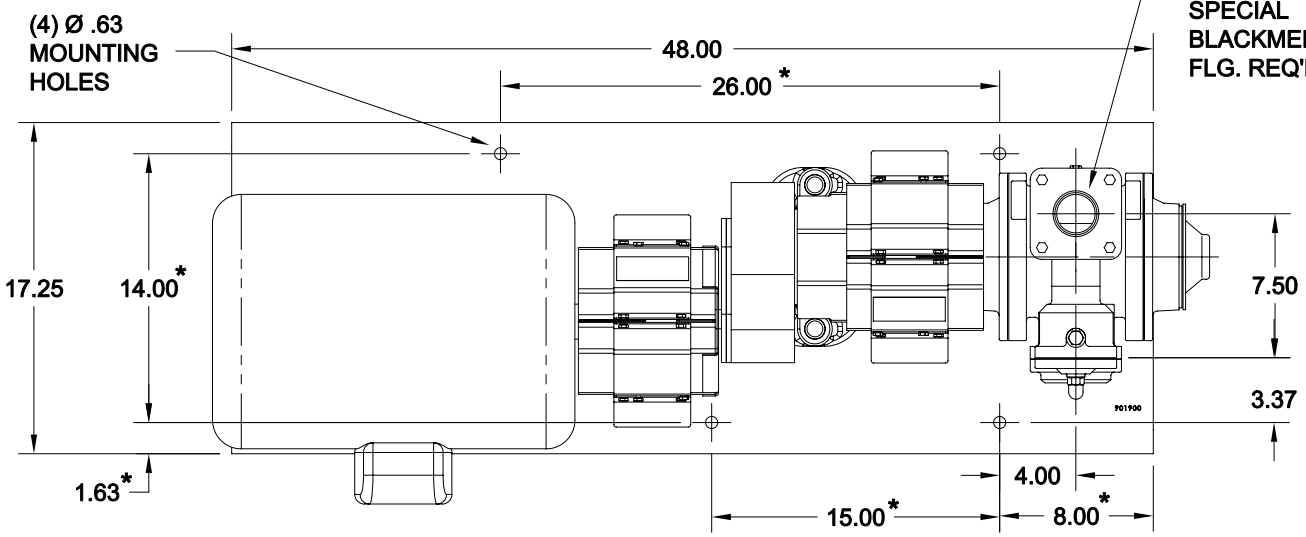

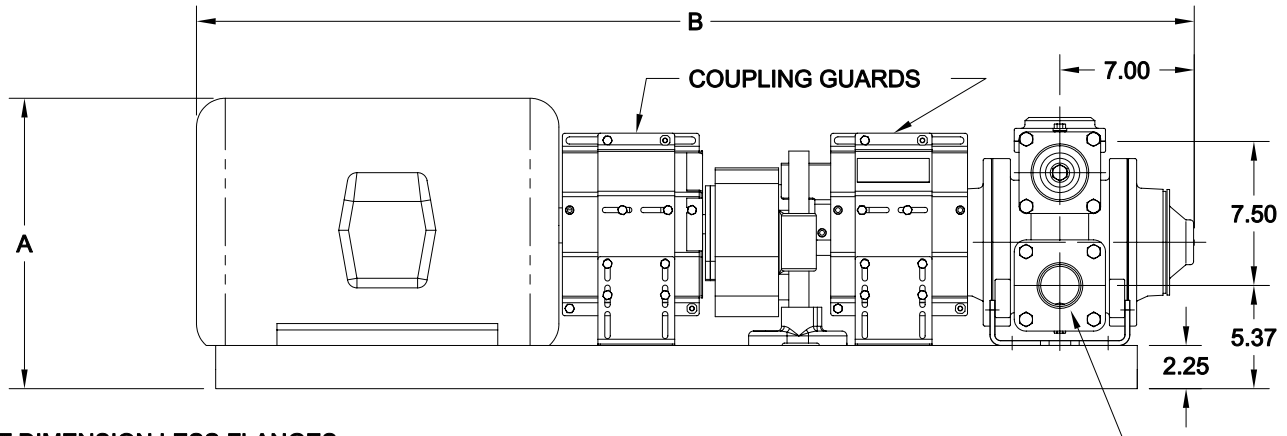

UNIT DIMENSION LESS FLANGES
* TOLERANCE ± .13
TOLERANCE AN ALL OTHER DIMENSIONS ± .25
"A" DIMENSION LESS EYEBOLT

FLANGE HT: 3" WELD - 1.25"

MOTOR		UNITS	DIMENSIONS									
FRAME SIZE	BASE		A	B								
182T	901900	IN	11.88	45								
184T	901900	IN	11.88	45								
213T	901900	IN	13.68	47.88								
215T	901900	IN	13.68	47.88								
254T	901900	IN	15.13	52								
256T	901900	IN	15.13	52								

TYPE	SIZE	UNIT STYLE
SX	3A	HRA

DIMENSIONS 104-143

Section	104
Effective	October 2006
Replaces	NEW
Page 3/3	

www.blackmer.com

LEFT HAND ROTATION.

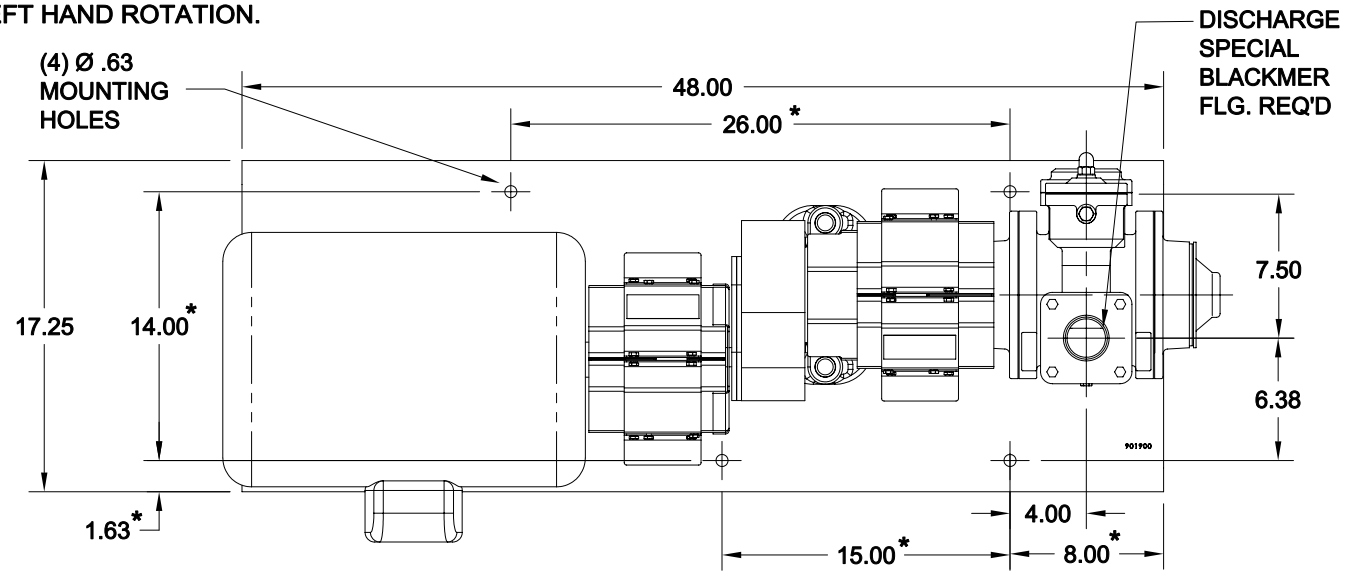

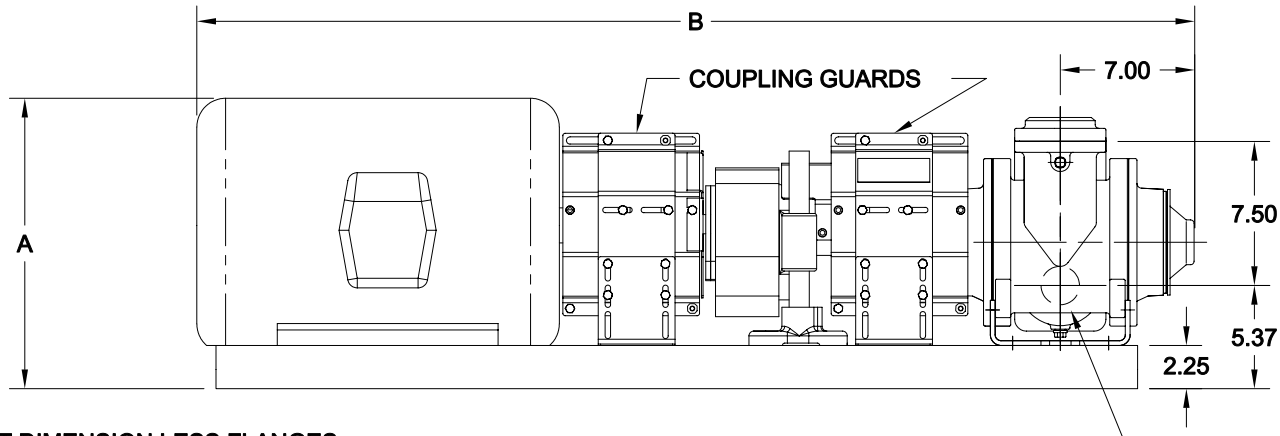

UNIT DIMENSION LESS FLANGES
* TOLERANCE ± .13
TOLERANCE AN ALL OTHER DIMENSIONS ± .25
"A" DIMENSION LESS EYEBOLT

FLANGE HT: 3" WELD - 1.25"

MOTOR		UNITS	DIMENSIONS									
FRAME SIZE	BASE		A	B								
182T	901900	IN	11.88	45								
184T	901900	IN	11.88	45								
213T	901900	IN	13.68	47.88								
215T	901900	IN	13.68	47.88								
254T	901900	IN	15.13	52								
256T	901900	IN	15.13	52								